PREVUE PET PRODUCTS

Southbeach Collection

Model: #21006–Dometop

Instructions online at www.prevuepet.com

read first

REVIEW BEFORE ASSEMBLY

- No tools are required for assembly
- For best results, follow the Steps in the order they are presented

For assistance or replacement parts, please contact Prevue Pet Products:

PHONE 312.243.3624
ONLINE www.prevuepet.com
EMAIL customerservice@prevuepet.com

CLEANING INSTRUCTIONS

- When cleaning the cage and components, use a soft cloth or Teflon-resistant scrubber, such as Prevue's **Cage Saver** non-abrasive scrub pad (#109).
- Wash the cage and all components with warm water and a mild, environmentally-friendly, pet-safe soap. Rinse all parts thoroughly.
- Hand dry parts completely with a soft dry cotton cloth before reassembling the cage. Do not leave plastic components to dry in the sun, as they may warp.

1 To assemble the BASE, you will need these pieces:

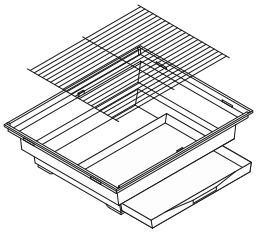

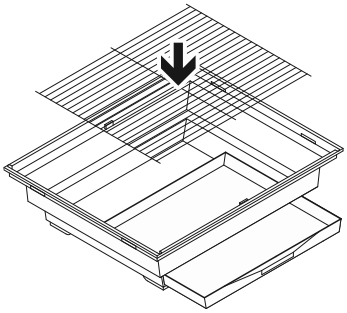

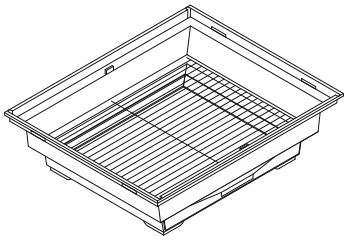

2 To assemble the CAGE BODY, you will need these pieces:

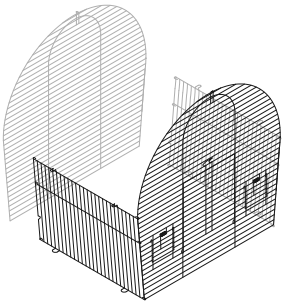

Start at the bottom. Pull the bottom wire hook from the side panel onto the outer wire of the back panel.

Keep the loop bend to the inside of the cage.

Continue up the seam and catch the remaining hooks onto the back panel.

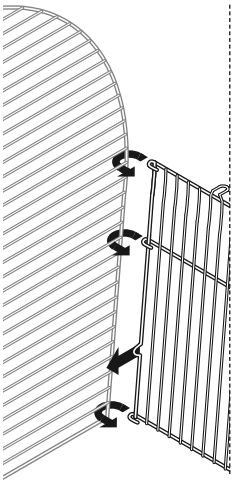

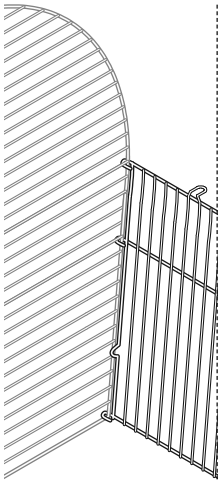

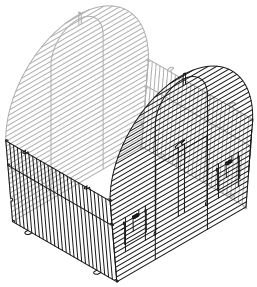

3 Attach the cage body to the base:

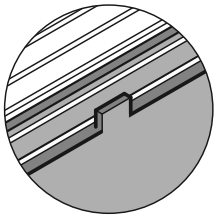

Front and back:
Position the bottom wire between the rim and the raised tabs in the base.

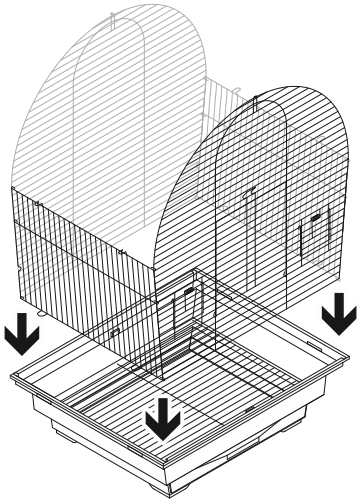

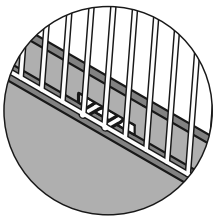

Sides:
Insert the wire loops (two per side) into the slots along the base rim.

Made in China for Prevue Pet Products, Inc., 224 N Maplewood Ave, Chicago IL 60612 USA • www.prevuepet.com • 1 [800] 243-3624 • customerservice @ prevuepet.com

4 To install the **COMPONENTS**, you will need these pieces:

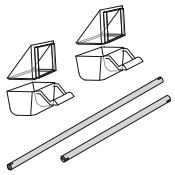

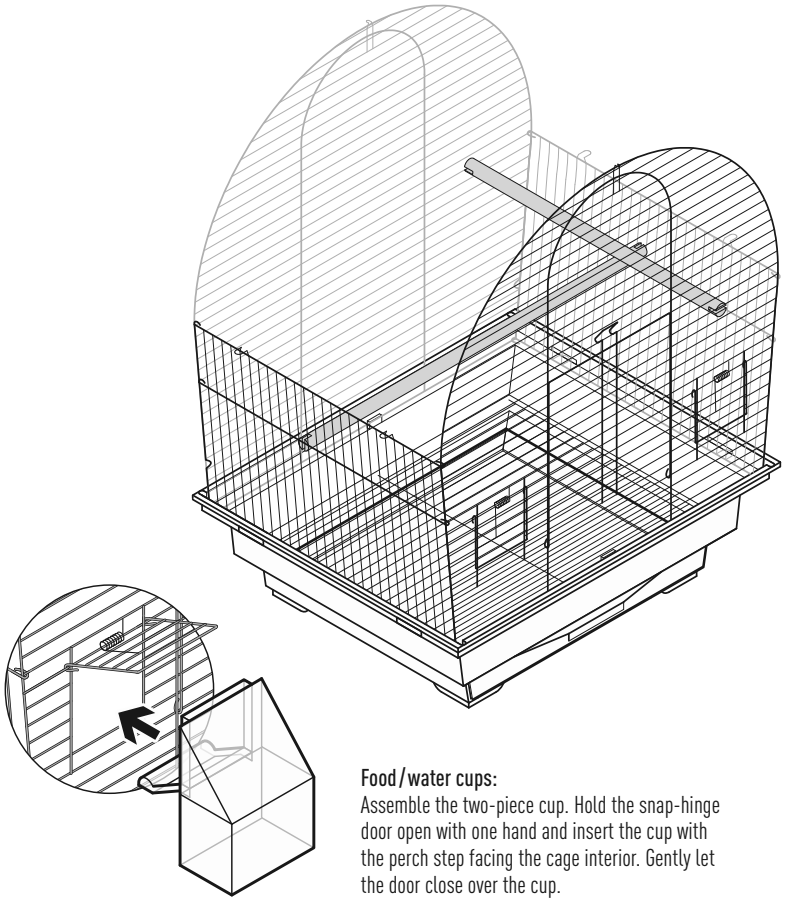

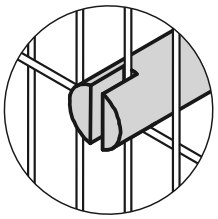

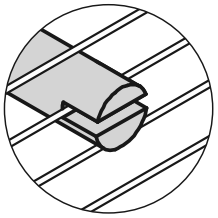

Perches:
Insert the longer perch on a vertical wire, resting on a horizontal wire for stability.

Install the shorter perch on a horizontal wire, from cage front to back.

When installing perches, stagger their placement to allow birds room to sit, walk, and move about.

Food/water cups:
Assemble the two-piece cup. Hold the snap-hinge door open with one hand and insert the cup with the perch step facing the cage interior. Gently let the door close over the cup.

5 To install the **ROOF**, you will need this piece:

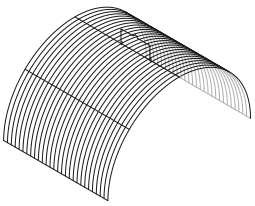

Starting on one side, hook the outer wire of the roof under the wire loops along the side panel.

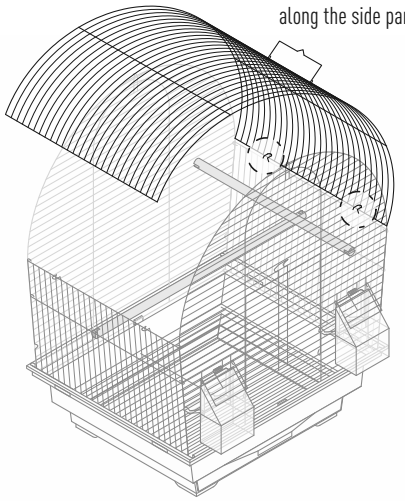

At the peak, hook the outer wire of the roof over the wire loops along the front/back panels.

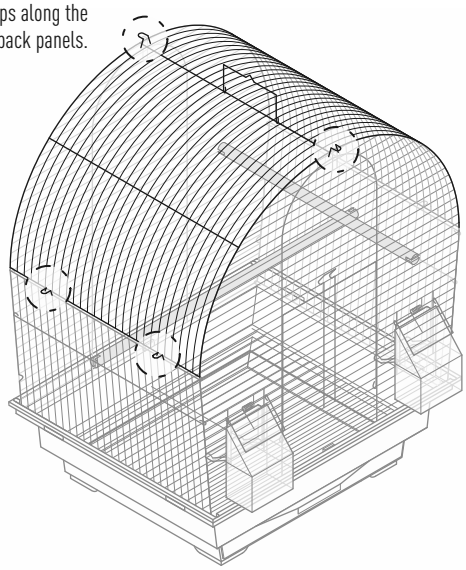

On the remaining side, pull the roof down taut and catch the bottom of the roof under the wire loops along the side panel.

For more wonderful cages, toys, and accessories for dogs, cats, birds, chickens, rabbits, ferrets and small animals, visit www.prevuepet.com